REVISIONS				
LTR	DESCRIPTION	DATE	REVISED	APPROVED

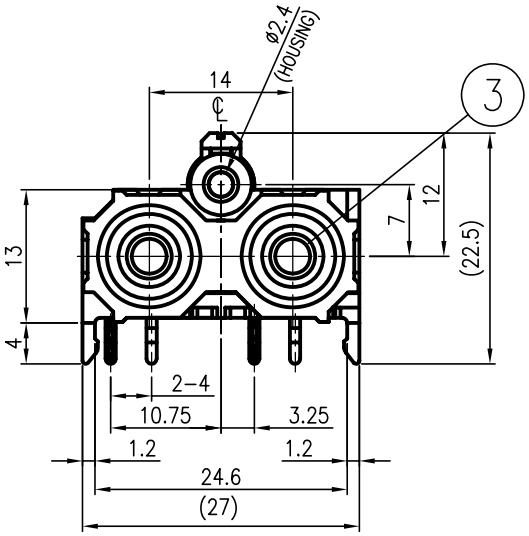

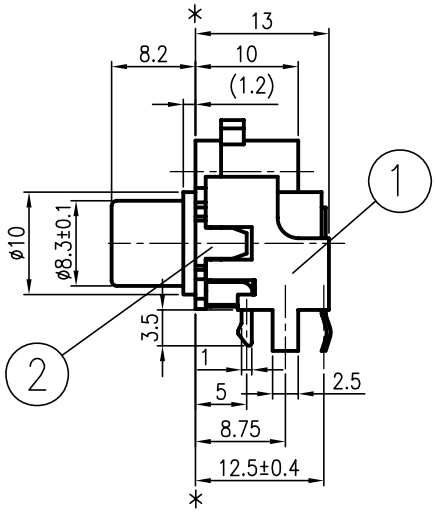

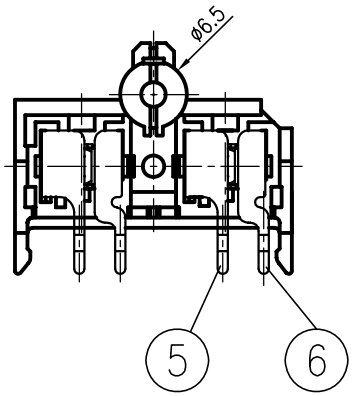

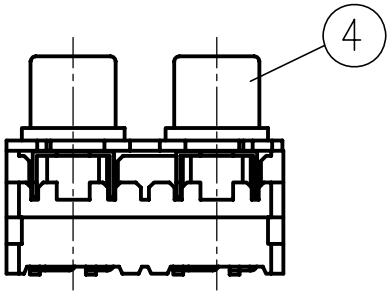

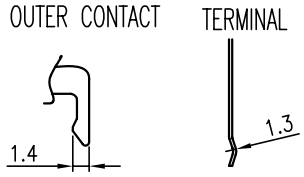

Model No.	KM04048A
Schematic	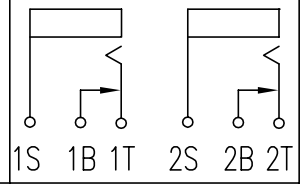

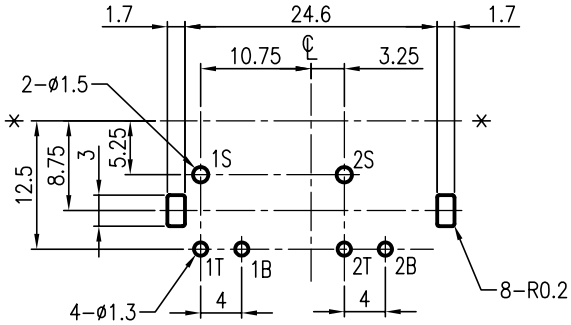

P.C.B Layout Dimension (Tolerance:±0.1)
(Recommend min.Dimension)(bottom view)

LTR	PART NO.	QTY	MATERIAL	REMARK
6	TIP SPRING	2	PHOSPHOR BRONZE t=0.3	Please refer color combination list.
5	SHUNT SPRING	2	BRASS t=0.4	
4	OUTER CONTACT	2	BRASS t=0.4	
3	WASHER	2	POM UL-94HB	
2	COVER	1	ABS UL-94HB	
1	HOUSING	1	ABS UL-94HB	

DWN	LEON	DATE	2008.03.26	SCALE /	NAME PIN JACK
DSND	LEON	DATE	2008.03.26	PROJECTION	
CHKD	Qilin/ALLAN	DATE	2008.03.27		CAT. NO. KM04048A-__
APVD	BENSON	DATE	2008.03.29	UNIT: mm	

KUNMING ELECTRONICS CO.,LTD.

DWN.NO. A-04048A 1/1 A

UNLESS OTHERWISE SPECIFIED, TOLERANCE ON DECIMAL: ±0.3 ANGLES: ±5°