REVISIONS				
LTR	DESCRIPTION	DATE	REVISED	APPROVED

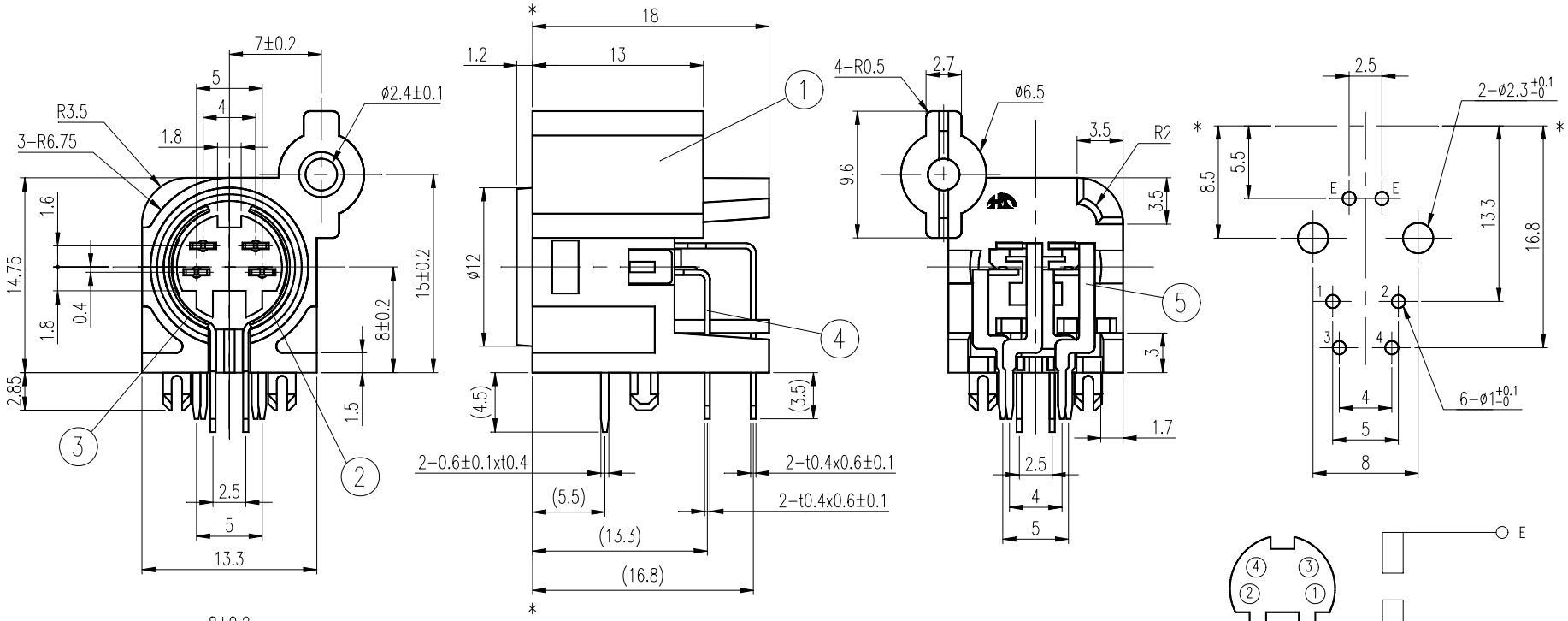

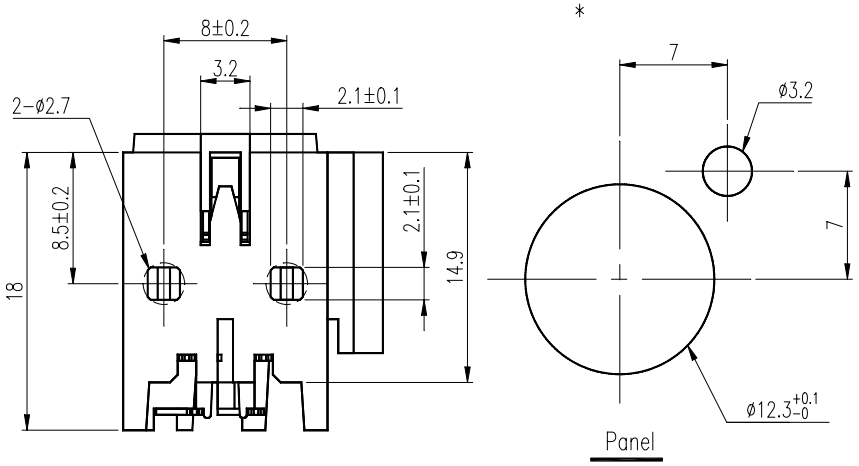

5	TERMINAL	2	C5191	t=0.4	MBCu2-Sn3
4	TERMINAL	2	C5191	t=0.4	MBCu2-Sn3
3	L-GROUND CONTACT	1	C5191	t=0.4	MBCu2-Sn3
2	R-GROUND CONTACT	1	C5191	t=0.4	MBCu2-Sn3
1	HOUSING	1	PBT+GF		UL-94V-0
LTR	PART NAME	QTY	MATERIAL		REMARK

DSND	LEO	DATE	2002.01.07	3RD ANGLE PROJECTION	NAME S-JACK
DWN	JOLLY	DATE	2005.05.29		
CHKD	JOHNSON	DATE	2005.05.30		CAT. No. HDC-058SP
APVD	ERIC	DATE	2005.05.30	UNIT : mm	

KUNMING ELECTRONICS CO., LTD.

DWN. No. A-058SP 1/1 A

UNLESS OTHERWISE SPECIFIED, TOLERANCE ON DECIMAL: ±0.3 ANGLES: ±5°