REVISIONS				
LTR	DESCRIPTION	DATE	REVISED	APPROVED

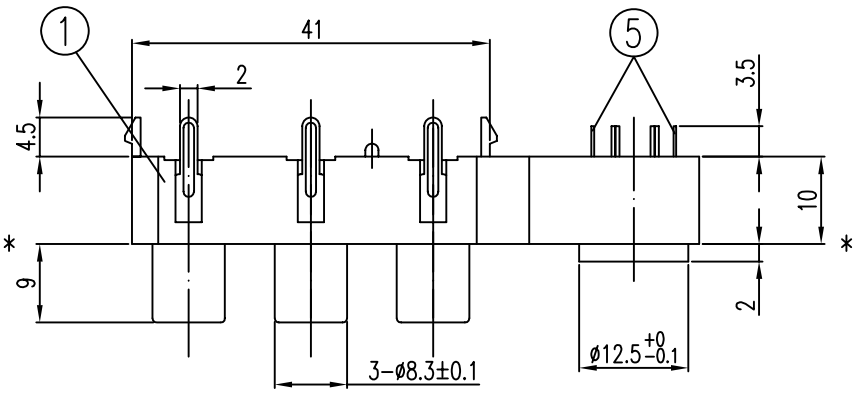

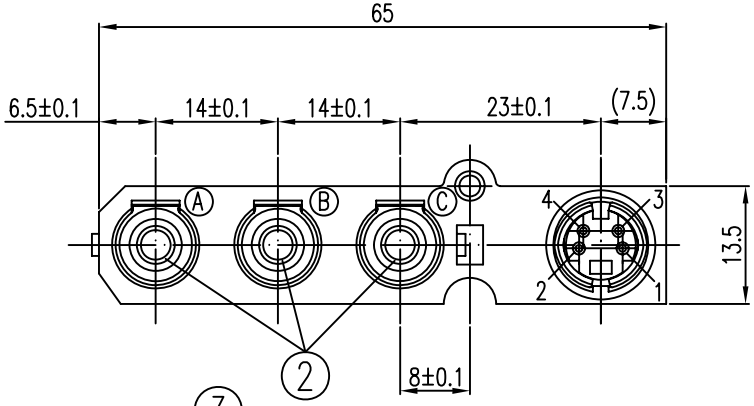

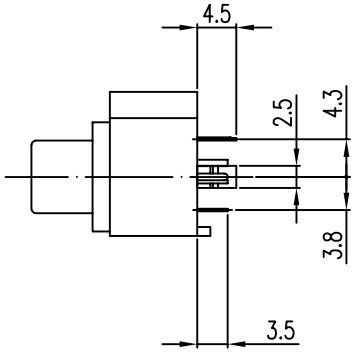

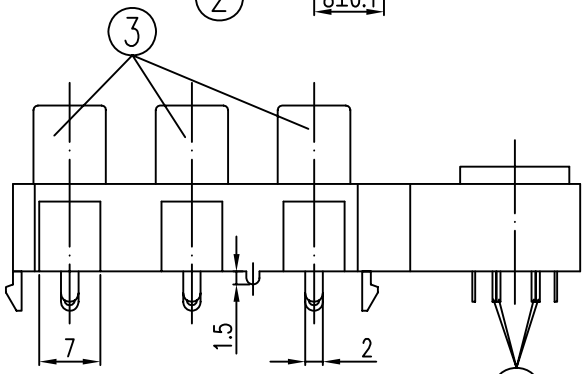

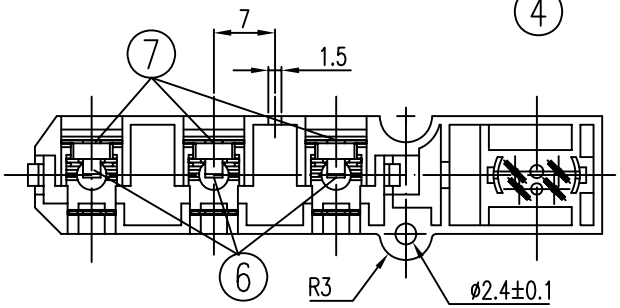

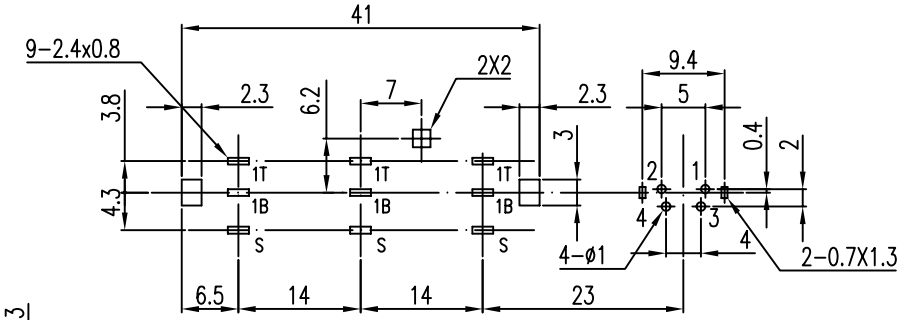

P.C.B Layout Dimension (Tolerance:±0.1)
(Recommend min.Dimension)(bottom view)

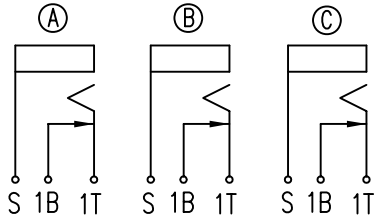

PIN JACK CIRCUIT

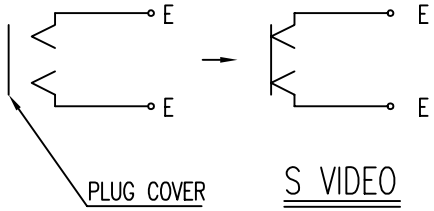

S VIDEO

LTR	PART NAME	QTY	MATERIAL	REMARK
7	TIP SPRING	3	C5210 ; t=0.3	Please refer color combination list.
6	SHUNT SPRING	3	C2680 ; t=0.4	
5	GROUND CONTACT	2	C5191 ; t=0.4	
4	TERMINAL	4	C5210 ; t=0.4	
3	OUTER CONTACT	3	SPCC ; t=0.3	
2	WASHER	3	POM	
1	HOUSING	1	PPO	

DSND	QUE.XL	DATE	2006.08.09	SCALE /	NAME PIN JACK
DWN	QUE.XL	DATE	2006.08.09	PROJECTION	
CHKD	BILL	DATE	2006.08.10		CAT. NO. KM04018A1-_Z
APVD	JOHNSON	DATE	2006.08.11	UNIT: mm	

KUNMING ELECTRONICS CO.,LTD.

DWN.NO. A-04018A1Z 1/1 A

UNLESS OTHERWISE SPECIFIED, TOLERANCE ON DECIMAL: ±0.3 ANGLES: ±5°